OCTAquick 1x3 THE EXTENSION MODULE

MAXIMUM IMPACT AND GOOD ECONOMY

Basic OCTAquick exhibition stand modules can be expanded simply and easily with a purpose designed extension module illustrated above. The extension module is supplied in its own carry case complete with a 150-watt spotlight and power cable.
The OCTAquick accessories range has been carefully formulated to provide optional extras that will help to maximise the use of exhibition space. The result is a range of unique selfbuild modules and accessories for the effective presentation of a company, its products and services. Exhibiting has never been so easy or cost-effective.

Q 40, Q 42

Sturdy transport case

Hexstar driver

Shelf Q 80

EXTENDED MODULES:

Stand size “4x3”*

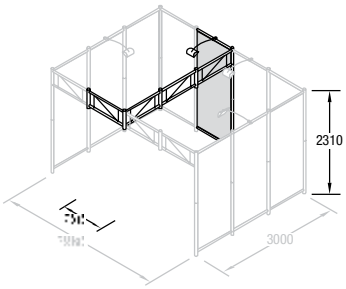

Q 40+Q 41
(already available)

Q 50
1x3 Extension set
Incl. transport case **Q 502**
and lighting.
weight: 55,12 lb/25.0 kg

Q 51
Wall infill panel set “fabric”,
white, with incl. mounting profile
weight: 2.87 lb/1.3 kg

Stand size “5x3”*

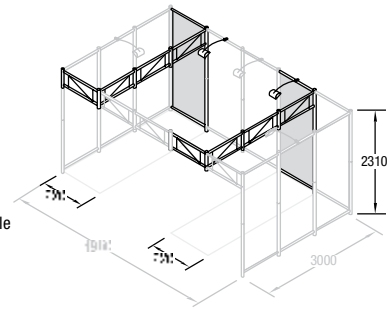

Q 40+Q 41
(already available)

2 x Q 50
1x3 Extension set Incl.
transport case **Q 502**
and lighting
weight: 110.23 lb/50.0 kg

2 x Q 51
Wall infill panel set “fabric”,
white, with inserted mounting
profile weight: 5.73 lb/2.6 kg

Stand size “4x3”*

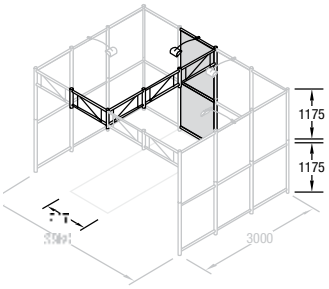

Q 40+Q 42
(already available)

Q 50
1x3 Extension set
Incl. transport case **Q 502**
and lighting
weight: 121.25 lb/25.0 kg

Q 52
Wall infill panel set “wood”,
white, 3.2 mm Incl. 1 beam
and wooden case
weight: 17.64 lb/8.0 kg

Stand size “5x3”*

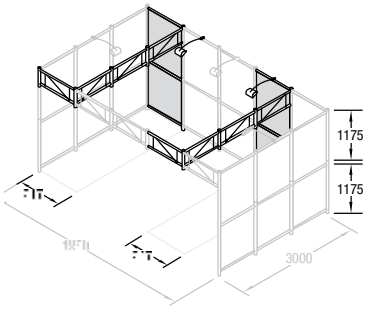

Q 40+Q 42
(already available)

2 x Q 50
1x3 Extension set Incl.
transport case **Q 502**
and lighting
weight:110.23 lb/50.0 kg

2 x Q 52
Wall infill panel set “wood”,
white, 3.2 mm incl. 1 beam
and a wooden case
weight: 35.27 lb/16.0 kg

**Naturally your creativity is required here: we will be glad to advise you on all stand varieties...*

ACCESSORIES:

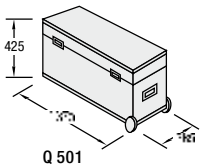

Q 501
Transport case
for beams and acces-
sories incl. in the
corresponding sets

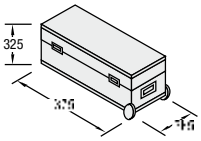

Q 502
Transport case
for uprights and acces-
sories incl. in the
corresponding sets

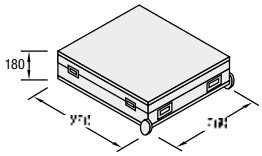

Q 503
Transport case for 3.2 mm
wood wall panels and
accessories incl. in wall
infill panel set **Q 42**

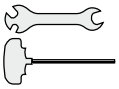

Q 99
Assembly tool set incl.
in all construction sets

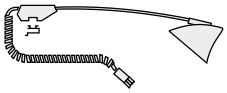

Q 370
Spotlight 150 W / 230 V
incl. in all construction sets

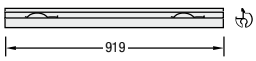

Q 326
Inserted mounting
profile for fabric infill
panels incl. in wall infill
panel sets “fabric”

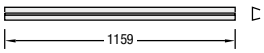

Q 316
Protecting profile for
3.2 mm thick panels
incl. in wall infill
panel sets “wood”

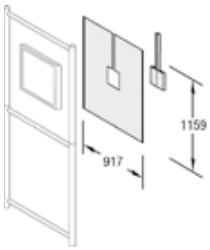

Q 305
Wall set for monitor

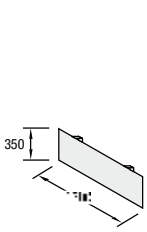

Q 70
Fascia set
wood, 10 mm,
white

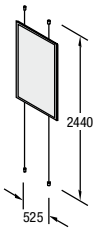

Q 90
Poster frame set
Placard size:
DIN A1

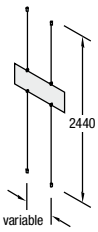

Q 91
Panel
fixing set

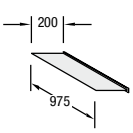

Q 80
shelf set

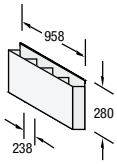

Q 81
Literature
holder set

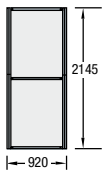

Q 321
Turning door, DIN left aluminium/
wood infill, white, 4 mm, lockable,
unmounted set

TECH. INFORMATION:

WALL INFILL PANEL “FABRIC”*

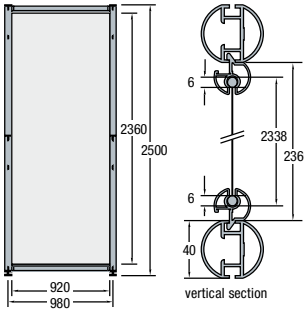

WALL INFILL PANEL “WOOD”*

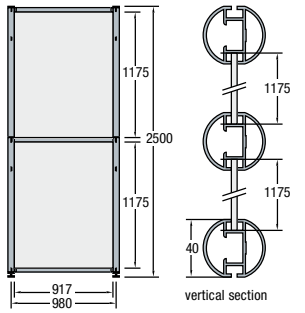

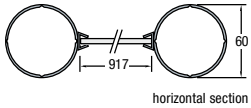

**ask for our technical information*
about OCTAquick filling dimensions.